Nadimpalli Satyanarayana Raju Institute of Technology (NSRIT)
Sontyam, Vizag, Andhra Pradesh

Preamble: This feedback form AC 23 is intended to receive feedback on the quality of questions to ensure that the intended learning outcomes in terms Knowledge, Understanding and Skill are assessed. Also this form helps us to improve the quality of the questions that appear in the assessment instrument.

The Vision of the Institute
To promote societal empowerment and become an institution of excellence in the field of engineering education and research.

The Mission of the Institute
- To develop the students into outstanding professionals through innovative Teaching-Learning process.
- To uphold research through long term Academia-Industry interaction.
- To inculcate ethical standards and moral values.

Dept.: Dept.: Civil Engg. | CSE | CSE (AI & ML) | CSE (DS) | ECE | EEE | ME | BS &H

Name of the Reviewer :DR T Vinay Kumar Designation: Assistant Professor
Organization : NIT Warangal
Academic Year :2020-21
Semester : I
Curse Title : BASIC ELECTRICAL ENGINEERING

1. Are the questions being relevant to the assessment of Course Outcomes as well as to understand the mastery of the learners on that course of study?

   Yes | No. If yes, please rate it on a five-point scale _____5_____ (5: High to 1: Low)

2. Are the questions being very clear in easily understandable language without any sort of ambiguity?

   Yes | No. If yes, please rate it on a five-point scale _____4_____ (5: High to 1: Low)

3. Are the questions being crisp and concise and omits irrelevant information that reduces the students' question response time?

   Yes | No. If yes, please rate it on a five-point scale _____4_____ (5: High to 1: Low)

4. Do you observe any of the questions that has less scope to assess the intended knowledge and skill?

   Yes | No. If yes, please rate it on a five-point scale _____4_____ (5: High to 1: Low)

5. Are the questions being addressing appropriate cognitive levels of Revised Bloom's Taxonomy (RBT) that facilitates critical thinking and problem-solving skills?

   Yes | No. If yes, please rate it on a five-point scale _____4_____ (5: High to 1: Low)

6. Are the questions being single dimensional avoiding multiple ideas to evaluate one response at a time?

   Yes | No. If yes, please rate it on a five-point scale _____5_____ (5: High to 1: Low)

7. In general, how do you rate the quality and standard of questions?

~~Commendable~~ Excellent ~~Good~~ ~~Satisfactory~~

8. General Remarks

Signature

Semester End Supplementary Examination, October, 2021

Degree	B. Tech. (U. G.)	**Program**	ECE & EEE			**Academic Year**	2020 - 2021
Course Code	20ESX03	**Test Duration**	3 Hrs.	Max. Marks	70	**Semester**	I
Course	**BASIC ELECTRICAL ENGINEERING**						

Part A (Short Answer Questions 5 x 2 = 10 Marks)

No.	Questions (1 through 5)	Learning Outcome (s)	DoK
1	What is the difference between dependent and independent sources?	20ESX03.1	L1
2	What is the significance of back E.M.F in a D. C. motor?	20ESX03.2	L1
3	What do you mean by KVA rating of a transformer?	20ESX03.3	L1
4	Define voltage regulation of an alternator and also write the expression	20ESX03.4	L1
5	Write the applications of AC servo motor and single phase induction motor.	20ESX03.5	L1

Part B (Long Answer Questions 5 x 12 = 60 Marks)

No.	Questions (6 through 15)	Marks	Learning Outcome (s)	DoK
6 (a)	Explain inductance element. Also derive the expression for energy stored in it	7M	20ESX03.1	L2
6 (b)	Four resistors of 5Ω, 7Ω, 9Ω and 12Ω are connected in series across a 100V source. Calculate the voltage drop across each resistor and power absorbed by each resistor	5M	20ESX03.1	L3
	OR			
7 (a)	Classify the different types of network elements	6M	20ESX03.1	L2
7 (b)	Calculate the voltage to be applied across AB in order to drive current of 5A In the circuit by using star-delta transformation for the network shown in figure below? 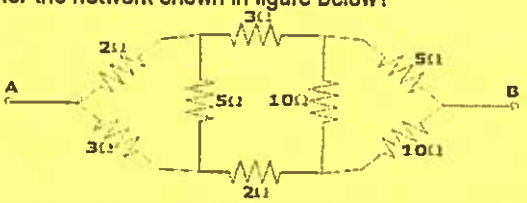	6M	207ESX03.1	L3
8 (a)	Explain the principle and operation of a D. C. generator	6M	20ESX03.2	L2
8 (b)	Explain the construction of D.C. generators	6M	20ESX03.2	L3
	OR			
9	Explain the necessity of starter in a D. C. motor and explain the operation of a three point starter with a neat sketch	12M	20ESX03.2	L2
10 (a)	Explain the principle of operation of single phase transformer	5M	20ESX03.3	L2
10 (b)	A single phase 200/400 V, 6 KVA, 50 Hz transformer gave the following results. OC test(LV side) : 200 V, 0.8 A, 80 W SC test(HV side) : 25 V, 10 A, 90 W Determine (i) The circuit constants referred to L.V side (ii) The efficiency at full load with 0.8 lagging power factor	7M	20ESX03.3	L3

G. Kalyani

Controller of Examinations
NSRIT (A)
Visakhapatnam

	OR			
11 (a)	Describe the parallel operation of a single phase transformer	6M	20ESX03.3	L2
11 (b)	Explain various losses that occur in a transformer	6M		
12 (a)	Describe the concept of rotating magnetic field.	5M	20ESX03.4	L2
12 (b)	A 10 MVA 6.6 kV, 3 phase star connected alternator gave open circuit and short circuit data as follows: Field current in amps : 25 50 75 100 125 150 OC voltage in kV (L-L) : 2.4 4.8 6.1 7.1 7.6 7.9 SC Current in Amps : 288 528 875 Find the voltage regulation at full load 0.8 pf lagging by e.m.f. method. Armature resistance per phase = 0.13 Ω	7M	20ESX03.4	L3
	OR			
13 (a)	Explain the Speed - Torque characteristics of three phase induction motor	7M	20ESX03.4	L2
13 (b)	Derive the E.M.F. equation of alternator	5M	20ESX03.4	L2
14 (a)	Explain the principle of operation and construction of shaded pole induction motor	6M	20ESX03.5	L2
14 (b)	Explain the working of capacitor-start type single phase induction motor	6M	20ESX03.5	L2
	OR			
15 (a)	Explain the working principle of A. C. servo motors with neat sketches	7M	20ESX03.5	L2
15 (b)	Differentiate between single phase and three phase induction motors	5M	20ESX03.5	L2

G Kalyani
Controller of Examinations
NSRIT (A)
Visakhapatnam

Nadimpalli Satyanarayana Raju Institute of Technology (NSRIT)
Sontyam, Vizag, Andhra Pradesh

Preamble: This feedback form AC 23 is intended to receive feedback on the quality of questions to ensure that the intended learning outcomes in terms Knowledge, Understanding and Skill are assessed. Also this form helps us to improve the quality of the questions that appear in the assessment instrument.

Dept.: Dept.: Civil Engg. | CSE | CSE (AI & ML) | CSE (DS) | ECE | EEE | ME | BS & H

Name of the Reviewer : KSRC Raju
Designation VP, operations & client Engagement
Organization : Axiom 10
Academic Year : 2020 - 2021
Semester : 1
Curse Title : FCS

1. Are the questions being relevant to the assessment of Course Outcomes as well as to understand the mastery of the learners on that course of study?

   Yes | No. If yes, please rate it on a five-point scale 4 (5: High to 1: Low)

2. Are the questions being very clear in easily understandable language without any sort of ambiguity?

   Yes | No. If yes, please rate it on a five-point scale 5 (5: High to 1: Low)

3. Are the questions being crisp and concise and omits irrelevant information that reduces the students' question response time?

   Yes | No. If yes, please rate it on a five-point scale 3 (5: High to 1: Low)

4. Do you observe any of the questions that has less scope to assess the intended knowledge and skill?

   Yes | No. If yes, please rate it on a five-point scale _____ (5: High to 1: Low) Yes, there are few

5. Are the questions being addressing appropriate cognitive levels of Revised Bloom's Taxonomy (RBT) that facilitates critical thinking and problem-solving skills?

   Yes | No. If yes, please rate it on a five-point scale _____ (5: High to 1: Low) There are more concept questions & are not really designed for critical thinking

6. Are the questions being single dimensional avoiding multiple ideas to evaluate one response at a time?

   Yes | No. If yes, please rate it on a five-point scale _____ (5: High to 1: Low)

7. In general, how do you rate the quality and standard of questions?

   Commendable Excellent Good Satisfactory

8. General Remarks

   As I recommended earlier, please run these through Rohini Kuma, and I am sure he will help you design them further.

Signature

20 Aug 2020

NSRIT

Semester End Examination, July/August, 2021

Degree	B. Tech. (U. G.)	**Program**	CSE/CSM/CSD			**Academic Year**	2020 - 2021
Course Code	20CS101	**Test Duration**	3 Hrs.	Max. Marks	70	**Semester**	I
Course	**FUNDAMENTALS OF COMPUTER SCIENCE**						

Part A (Short Answer Questions 5 x 2 = 10 Marks)

No.	Questions (1 through 5)	Learning Outcome (s)	DoK
1	List any four input devices	20CS101.1	L1
2	Define middle level language	20CS101.2	L2
3	Illustrate Hybrid topology in a network	20CS101.3	L1
4	List any two advantages of database approach	20CS101.4	L1
5	Define Artificial Intelligence	20CS101.5	L1

Part B (Long Answer Questions 5 x 12 = 60 Marks)

No.	Questions (6 through 10)	Marks	Learning Outcome (s)	DoK
6 (a)	Describe the functions of various components of computer system with neat diagram	6M	20CS101.1	L2
6 (b)	Summarize different types of memory available in computer system in the order of their hierarchy with respect to CPU access	6M	20CS101.1	L2
	OR			
7 (a)	Explain peripheral devices of computer system	8M	20CS101.1	L2
7 (b)	What are the factors to be considered while selecting input device?	4M	20CS101.1	L2
8 (a)	Define an algorithm. List the characteristics of a good algorithm. Write an algorithm for printing N integers	8M	20CS101.2	L2
8 (b)	Explain Low level and High Level programming languages	4M	20CS101.2	L2
	OR			
9 (a)	Define a pseudo code? Write the pseudo code for integer arithmetic operations	6M	20CS101.2	L1
9 (b)	Explain machine and assembly programming languages	6M	20CS101.2	L1
10 (a)	Explain any two network topologies with neat illustrations	6M	20CS101.3	L1
10 (b)	Outline the evolutions of operating systems	6M	20CS101.3	L1
	OR			
11 (a)	Describe any three network devices by specifying its purpose	8M	20CS101.3	L2
11 (b)	Explain the various types of networks and its limitations	4M	20CS101.3	L1
12 (a)	Explain the hierarchical, relational database models	8M	20CS101.4	L2
12 (b)	Explain three level architecture with diagram	4M	20CS101.4	L1
	OR			
13 (a)	Explain the components of database system	8M	20CS101.4	L1
13 (b)	Compare file oriented and database oriented systems with its advantages and disadvantages	4M	20CS101.4	L2
14 (a)	Write the evolutions of AI	4M	20CS101.5	L1
14 (b)	Describe the ingredients of machine learning	8M	20CS101.5	L2
	OR			
15 (a)	List any six applications of AI	6M	20CS101.5	L1
15 (b)	Explain the different types in machine learning	6M	20CS101.5	L2

G. Kalyani
Controller of Examinations
NSRIT (A)
Visakhapatnam

Nadimpalli Satyanarayana Raju Institute of Technology (NSRIT)
Sontyam, Vizag, Andhra Pradesh

Preamble: This feedback form AC 23 is intended to receive feedback on the quality of questions to ensure that the intended learning outcomes in terms Knowledge, Understanding and Skill are assessed. Also this form helps us to improve the quality of the questions that appear in the assessment instrument.

Dept.: Dept.: Civil Engg. | CSE | CSE (AI & ML) | CSE (DS) | ECE | EEE | ME | BS & H

Name of the Reviewer : P. Santosh Designation : H.R
Organization : Axiom IO
Academic Year : 2020-2021
Semester : II
Curse Title : PPSUC

1. Are the questions being relevant to the assessment of Course Outcomes as well as to understand the mastery of the learners on that course of study?

   Yes | No. If yes, please rate it on a five-point scale 4 (5: High to 1: Low)

2. Are the questions being very clear in easily understandable language without any sort of ambiguity?

   Yes | No. If yes, please rate it on a five-point scale 5 (5: High to 1: Low)

3. Are the questions being crisp and concise and omits irrelevant information that reduces the students' question response time?

   Yes | No. If yes, please rate it on a five-point scale 5 (5: High to 1: Low)

4. Do you observe any of the questions that has less scope to assess the intended knowledge and skill?

   Yes | No. If yes, please rate it on a five-point scale 4 (5: High to 1: Low)

5. Are the questions being addressing appropriate cognitive levels of Revised Bloom's Taxonomy (RBT) that facilitates critical thinking and problem-solving skills?

   Yes | No. If yes, please rate it on a five-point scale 4 (5: High to 1: Low)

6. Are the questions being single dimensional avoiding multiple ideas to evaluate one response at a time?

   Yes | No. If yes, please rate it on a five-point scale 4 (5: High to 1: Low)

7. In general, how do you rate the quality and standard of questions?

   Commendable Excellent Good Satisfactory

8. General Remarks

P. Santosh
Signature

NSRIT

Semester End Examination, July/August, 2021

Degree	B. Tech. (U. G.)	**Program**	Common to All			**Academic Year**	2020 - 2021
Course Code	20ESX02	**Test Duration**	3 Hrs.	Max. Marks	70	**Semester**	I
Course	**PROGRAMMING FOR PROBLEM SOLVING USING 'C'**						

Part A (Short Answer Questions 5 x 2 = 10 Marks)

No.	Questions (1 through 5)	Learning Outcome (s)	DoK
1	List any four C tokens	20ESX02.1	L1
2	List any four bitwise operators in C	20ESX02.2	L1
3	Define array and write the syntax to declare an array	20ESX02.3	L1
4	Define pointers	20ESX02.4	L1
5	State the use of ftell() function with an example	20ESX02.5	L1

Part B (Long Answer Questions 5 x 12 = 60 Marks)

No.	Questions (6 through 15)	Marks	Learning Outcome (s)	DoK
6 (a)	Demonstrate printf() and scanf() statements with examples	4M	20ESX02.1	L2
6 (b)	Explain structure of C program, Process of compiling and running a C program	8M	20ESX02.1	L1
	OR			
7 (a)	If cost price and selling price of an item S input through the keyboard, write a program to determine whether the seller has made profit or incurred loss. Write a C program to determine how much profit or loss incurred in percentage	4M	20ESX02.1	L3
7 (b)	Describe any two categories of operators	8M	20ESX02.1	L2
8 (a)	Summarize the loop control statements in C	8M	20ESX02.2	L2
8 (b)	Write a C program to print the following pattern 1 12 123 1234	4M	20ESX02.2	L3
	OR			
9 (a)	Demonstrate switch-case statement for displaying month names for the given digit (1-12)	6M	20ESX02.2	L3
9 (b)	Explain various parameter passing methods in C	6M	20ESX02.2	L2
10 (a)	Write a C program that uses functions to convert decimal number to binary number	6M	20ESX02.3	L3
10 (b)	Write C program that uses both recursive and non-recursive functions to find the factorial of a given number	6M	20ESX02.3	L2
	OR			
11 (a)	Describe any 6 string handling functions with examples	6M	20ESX02.3	L3
11 (b)	Write any 6 built-in functions for mathematical operations along with respective header file	6M	20ESX02.3	L2

G. Kalyani

Controller of Examinations
NSRIT (A)
Visakhapatnam

12 (a)	Write a C program to maintain a book structure containing name, author and pages as structure members. Pass the address of structure variable to a user defined function and display the contents	6M	20ESX02.4	L2
12 (b)	Define a structure called complex consisting of two floating point numbers x and y and declare a variable p of type complex. Assign initial values 0.0 and 1.1 to the members	6M	20ESX02.4	L2
	OR			
13	Compare the differences between structure and union. Explain usage of structure in terms of definition, declaration and accessing members with syntax and example	12M	20ESX02.4	L2
14	With syntax and example describe the following file handling functions a. fopen() b. fclose() c. fread() d. fwrite() e. fscanf() f. fprintf()	12M	20ESX02.5	L2
	OR			
15 (a)	Describe pre-processor directives	6M	20ESX02.5	L2
15 (b)	Write a program for adding two integers and display the sum by taking input through command line arguments	6M	20ESX02.5	L2

G. Kalyani
Controller of Examinations
NSRIT (A)
Visakhapatnam

Nadimpalli Satyanarayana Raju Institute of Technology (NSRIT)
Sontyam, Vizag, Andhra Pradesh

Preamble: This feedback form AC 23 is intended to receive feedback on the quality of questions to ensure that the intended learning outcomes in terms Knowledge, Understanding and Skill are assessed. Also this form helps us to improve the quality of the questions that appear in the assessment instrument.

Dept.: Dept.: Civil Engg. | CSE | CSE (AI & ML) | CSE (DS) | ECE | EEE | ME | BS & H

Name of the Reviewer : P. Santosh Designation : H.R
Organization : Axiom IO
Academic Year : 2020-2021
Semester : II
Curse Title : PPSUC

1. Are the questions being relevant to the assessment of Course Outcomes as well as to understand the mastery of the learners on that course of study?

   Yes | No. If yes, please rate it on a five-point scale 4 (5: High to 1: Low)

2. Are the questions being very clear in easily understandable language without any sort of ambiguity?

   Yes | No. If yes, please rate it on a five-point scale 5 (5: High to 1: Low)

3. Are the questions being crisp and concise and omits irrelevant information that reduces the students' question response time?

   Yes | No. If yes, please rate it on a five-point scale 5 (5: High to 1: Low)

4. Do you observe any of the questions that has less scope to assess the intended knowledge and skill?

   Yes | No. If yes, please rate it on a five-point scale 4 (5: High to 1: Low)

5. Are the questions being addressing appropriate cognitive levels of Revised Bloom's Taxonomy (RBT) that facilitates critical thinking and problem-solving skills?

   Yes | No. If yes, please rate it on a five-point scale 4 (5: High to 1: Low)

6. Are the questions being single dimensional avoiding multiple ideas to evaluate one response at a time?

   Yes | No. If yes, please rate it on a five-point scale 4 (5: High to 1: Low)

7. In general, how do you rate the quality and standard of questions?

   Commendable Excellent Good Satisfactory

8. General Remarks

P. Santosh
Signature

NSRIT

Semester End Supplementary Examination, October, 2021

Degree	B. Tech. (U. G.)	Program	Common to All			Academic Year	2020 - 2021
Course Code	20ESX02	Test Duration	3 Hrs.	Max. Marks	70	Semester	II
Course	PROGRAMMING FOR PROBLEM SOLVING USING 'C'						

Part A (Short Answer Questions 5 x 2 = 10 Marks)

No.	Questions (1 through 5)	Learning Outcome (s)	DoK
1	Define Algorithm	20ESX02.1	L1
2	Write the syntax of switch statement in C	20ESX02.2	L1
3	Define an array and give an example	20ESX02.3	L1
4	What are Preprocessor directives? Give examples	20ESX02.4	L1
5	List various text file opening modes	20ESX02.5	L1

Part B (Long Answer Questions 5 x 12 = 60 Marks)

No.	Questions (6 through 15)	Marks	Learning Outcome (s)	DoK
6 (a)	Write the algorithm and corresponding flowchart to find the given number is Prime number or not	6M	20ESX02.1	L3
6 (b)	Explain all the data types with their ranges, examples	6M	20ESX02.1	L2
	OR			
7 (a)	Explain different categories of operators and their precedence	8M	20ESX02.1	L2
7 (b)	Write a program in C to find the prime numbers within a range of numbers. Sample Input/ Output: Input starting number of range: 1 Input ending number of range : 50 Expected Output : The prime number between 1 and 50 are :2 3 5 7 11 13 17 19 23 29 31 37 41 43 47	4M	20ESX02.2	L3
8 (a)	Write a program in C to display the multiplication table of a given integer	4M	20ESX02.2	L2
8 (b)	Describe the loop control statements in C	8M	20ESX02.2	L3
	OR			
9 (a)	Write a program to display week days for a given digit (1-7) using Switch case	6M	20ESX02.2	L3
9 (b)	Describe any three storage classes	6M	20ESX02.2	L1
10 (a)	Write C program that uses both recursive and non-recursive functions to find the sum of n natural numbers	6M	20ESX02.3	L2
10 (b)	Write C program to read a list of elements into an array and print the reverse of the list.	6M	20ESX02.3	L2
	OR			
11 (a)	Write a program in C to check whether a number is a prime number or not using the function. Example : Input a positive number : 5 Expected Output : The number 5 is a prime number	4M	20ESX02.3	L2
11 (b)	Explain built-in string handling functions	8M	20ESX02.3	L2
12 (a)	What are pointers? Describe pointer arithmetic with examples	6M	20ESX02.4	L2
12 (b)	Explain call by reference mechanism with an example program	6M	20ESX02.4	L2
	OR			
13	Compare the differences between structure and union. Explain usage of structure in terms of definition, declaration and accessing members with syntax and example	12M	20ESX02.4	L2

Controller of Examinations
NSRIT (A)
Visakhapatnam

14 (a)	Describe file handling functions	8M	20ESX02.5	L2
	Write a C program to read a text file "sample.txt" and print the following. a) Substring of N characters from the position I b) Reverse order of substring of N characters produced in a	4M	20ESX02.5	L2
	OR			
15 (a)	Describe pre-processor directives	6M	20ESX02.5	L2
15 (b)	Write a program for adding two integers and display the sum by taking input through command line arguments	6M	20ESX02.5	L2

G. Kalyani
Controller of Examinations
NSRIT (A)
Visakhapatnam

Nadimpalli Satyanarayana Raju Institute of Technology (NSRIT)
Sontyam, Vizag, Andhra Pradesh

Preamble: This feedback form AC 23 is intended to receive feedback on the quality of questions to ensure that the intended learning outcomes in terms Knowledge, Understanding and Skill are assessed. Also this form helps us to improve the quality of the questions that appear in the assessment instrument.

Dept.: Dept.: Civil Engg. | CSE | CSE (AI & ML) | CSE (DS) | ECE | EEE | ME | BS & H

Name of the Reviewer : KSRC Raju Designation VP Operations & Client Management
Organization : Axiom 10
Academic Year : 2020-2021
Semester : II
Curse Title : DSUC

1. Are the questions being relevant to the assessment of Course Outcomes as well as to understand the mastery of the learners on that course of study?

   ✓Yes | No. If yes, please rate it on a five-point scale 5 (5: High to 1: Low)

2. Are the questions being very clear in easily understandable language without any sort of ambiguity?

   ✓Yes | No. If yes, please rate it on a five-point scale 5 (5: High to 1: Low)

3. Are the questions being crisp and concise and omits irrelevant information that reduces the students' question response time?

   ✓Yes | No. If yes, please rate it on a five-point scale 5 (5: High to 1: Low)

4. Do you observe any of the questions that has less scope to assess the intended knowledge and skill?

   Yes | ✓No. If yes, please rate it on a five-point scale _____ (5: High to 1: Low)

5. Are the questions being addressing appropriate cognitive levels of Revised Bloom's Taxonomy (RBT) that facilitates critical thinking and problem-solving skills?

   ✓Yes | No. If yes, please rate it on a five-point scale 3 (5: High to 1: Low) They can be further tuned to cover the skills

6. Are the questions being single dimensional avoiding multiple ideas to evaluate one response at a time?

   Yes | ✓No. If yes, please rate it on a five-point scale _____ (5: High to 1: Low)

7. In general, how do you rate the quality and standard of questions?

   Commendable Excellent ✓Good Satisfactory

8. General Remarks

   I strongly suggest to run these questions through Rohit Kumar [Axiom 10] training partner. He will give you the best feedback.

Signature

20th Sep'22

NSRIT

Semester End Examination, Sept./Oct., 2021

Degree	B. Tech. (U. G.)	Program	CSE/CSM/CSD			Academic Year	2020 - 2021
Course Code	20CS201	Test Duration	3 Hrs.	Max. Marks	70	Semester	II
Course	Data Structures using 'C'						

Part A (Short Answer Questions 5 x 2 = 10 Marks)

No.	Questions (1 through 5)	Learning Outcome (s)	DoK
1	Compare Linear and Binary Search techniques	20CS201.1	L1
2	List any two advantages and disadvantages of using a Linked List	20CS201.2	L1
3	What are the conditions to be checked while using stack?	20CS201.3	L1
4	State the following terms: 1. Depth of a node 2. Height of a Tree	20CS201.4	L1
5	List any two applications of graphs	20CS201.5	L1

Part B (Long Answer Questions 5 x 12 = 60 Marks)

No.	Questions (6 through 15)	Marks	Learning Outcome (s)	DoK
6 (a)	Outline the steps to perform binary search on a sorted array of 'N' numbers. Write the algorithm. Trace your algorithm with an example	6M	20CS201.1	L2
6 (b)	Show how the following numbers are sorted using quick sort: 8, 1, 4, 9, 0, 3, 5, 2, 7, 6	6M	20CS201.1	L3
	OR			
7 (a)	Outline the steps to perform linear search on an array of 'N' numbers. Write the algorithm. Trace your algorithm with an example	6M	20CS201.1	L2
7 (b)	Illustrate by sorting the given array using Bubble Sort. A={10,40,25,30,20}. Pictorially show the sorting iteration by iteration	6M	20CS201.1	L3
8	Explain all possible insertion operations on single linked list with corresponding algorithm using 10, 20, 30, 40, 50. And sketch stepwise procedure from start to end	12M	20CS201.2	L2
	OR			
9 (a)	Explain the algorithm to insert at front and delete at front operations on Doubly Linked List	8M	20CS201.2	L2
9 (b)	Compare Singly Linked List with Doubly Linked List	4M	20CS201.2	L2
10 (a)	Convert the given infix to postfix expression: A/B ^ C + D \ E - A \ C. Give the algorithm for the same	6M	20CS201.3	L2
10 (b)	Explain push and pop operations of stack in its array implementation	6M	20CS201.3	L2
	OR			
11	Explain the linked list implementation of Queue with necessary diagrams and algorithms	12M	20CS201.3	L2
12 (a)	Construct a binary tree and perform traversal for performing preorder, inorder and post-order on the following sequence 8->7->6->9->11->10->12	6M	20CS201.4	L1
12 (b)	Explain representation of binary tree in memory with a neat sketch	6M	20CS201.4	L2

G-Kalyani
Controller of Examinations
NSRIT (A)
Visakhapatnam

	OR			
13	Explain the construction of binary search tree with example. Draw the diagram showing the step by step process	12M	20CS201.4	L1
14 (a)	Find the minimum spanning tree for the given graph using Kruskal algorithm 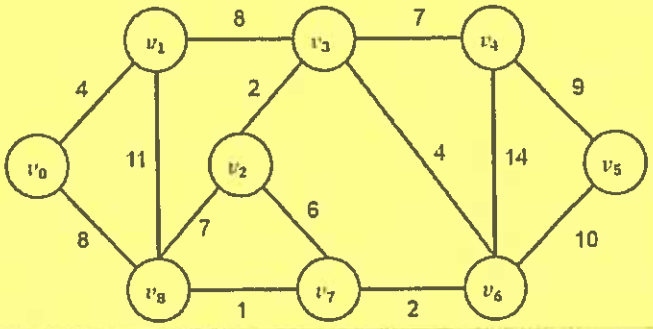	6M	20CS201.5	L2
14 (b)	Explain the Breadth First traversal with an example	6M	20CS201.5	L2
	OR			
15 (a)	Find the minimum spanning tree for the given graph using prim's algorithm 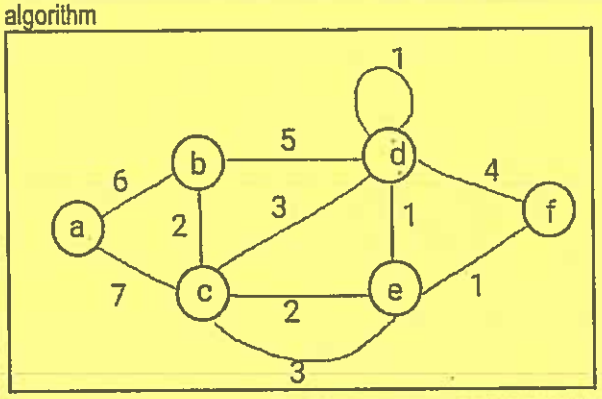	6M	20CS201.5	L2
15 (b)	Explain the Depth First traversal with an example	6M	20CS201.5	L2

G. Kalyani
Controller of Examinations
NSRIT (A)
Visakhapatnam

Nadimpalli Satyanarayana Raju Institute of Technology (NSRIT)
Sontyam, Vizag, Andhra Pradesh

Preamble: This feedback form AC 23 is intended to receive feedback on the quality of questions to ensure that the intended learning outcomes in terms Knowledge, Understanding and Skill are assessed. Also this form helps us to improve the quality of the questions that appear in the assessment instrument.

The Vision of the Institute
To promote societal empowerment and become an institution of excellence in the field of engineering education and research.

The Mission of the Institute
- To develop the students into outstanding professionals through innovative Teaching-Learning process.
- To uphold research through long term Academia-Industry interaction.
- To inculcate ethical standards and moral values.

Dept.: Dept.: Civil Engg. | CSE | CSE (AI & ML) | CSE (DS) | ECE | EEE | ME | BS &H

Name of the Reviewer : **Dr. Suresh Babu V** Designation: **Professor**
Organization : N I T Warangal
Academic Year : 2020 -2021
Semester : Second
Curse Title : Engineering Drawing

1. Are the questions being relevant to the assessment of Course Outcomes as well as to understand the mastery of the learners on that course of study?

   Yes | No. If yes, please rate it on a five-point scale _____4_____ (5: High to 1: Low)

2. Are the questions being very clear in easily understandable language without any sort of ambiguity?

   Yes | No. If yes, please rate it on a five-point scale ____4_____ (5: High to 1: Low)

3. Are the questions being crisp and concise and omits irrelevant information that reduces the students' question response time?

   Yes | No. If yes, please rate it on a five-point scale _____3_____ (5: High to 1: Low)

4. Do you observe any of the questions that has less scope to assess the intended knowledge and skill?

   Yes | No. If yes, please rate it on a five-point scale _____No_____ (5: High to 1: Low)

5. Are the questions being addressing appropriate cognitive levels of Revised Bloom's Taxonomy (RBT) that facilitates critical thinking and problem-solving skills?

   Yes | No. If yes, please rate it on a five-point scale _____4_____ (5: High to 1: Low)

6. Are the questions being single dimensional avoiding multiple ideas to evaluate one response at a time?

   Yes | No. If yes, please rate it on a five-point scale _____4_____ (5: High to 1: Low)

7. In general, how do you rate the quality and standard of questions? **Good**

Commendable Excellent Good Satisfactory

8. General Remarks

Signature

NSRIT

Semester End Examination, Sept./Oct., 2021

Degree	B. Tech. (U. G.)	Program	Common to EEE/ECE			Academic Year	2020 - 2021
Course Code	20ESX01	Test Duration	3 Hrs.	Max. Marks	70	Semester	II
Course	ENGINEERING DRAWING						

Part A (Short Answer Questions 2 x 5 = 10 Marks)

No.	Questions (1 through 2)	Learning Outcome (s)	DoK
1	Construct a scale to measure up to 50 m if 1cm represents 4 m, find its RF and mark a distance 37 m on it	20ESX01.2	L1
2	Draw a pentagon of side 30 mm	20ESX01.4	L3

Part B (Long Answer Questions 5 x 12 = 60 Marks)

No.	Questions (3 through 12)	Marks	Learning Outcome (s)	DoK
3 (a)	Draw a hyperbola having its two asymptotes passing through a point P at a distance of 30 mm from one asymptote and 36 mm from the other. Draw a normal and tangent at any convenient point	6M	20ESX01.1	L2
3 (b)	Construct a hexagon of side 25 mm by using general method	6M	20ESX01.1	L3
4 (a)	Draw the major axis of an ellipse is 110 mm long and the foci are at a distance of 15 mm from its ends. Draw the ellipse by concentric circles method	6M	20ESX01.1	L3
4 (b)	A 4 cm long line on map represents 1.5 metre length. Determine the RF and draw a scale long enough to measure up to 6 meters. Show a distance of 4.6 metres on it	6M	20ESX01.1	L2
5 (a)	A 70 mm long line PQ is inclined at 30° to the HP. The end P is 15 mm in front of the VP and 25 mm above the HP. Draw its projections	4M	20ESX01.2	L3
5 (b)	A line AB 75 mm long is inclined at 45° to the HP and 30° to VP. Its end A is in the HP and 40 mm infront of the VP. Draw its projections and determine traces	8M	20ESX01.2	L3
	OR			
6 (a)	Draw the following projection of points: I. A, 30 mm above HP and 20 mm infront of VP II. B, 20 mm above HP and 40 mm behind VP III. C, 20 mm below HP and 30 mm behind VP IV. D, is on both HP and VP	4M	20ESX01.2	L2
6 (b)	A 60 mm line AB, has an end P at 25 mm above the HP and 30 mm in front of VP. The line is inclined at 50° to HP and 40° to VP. Draw its projections	8M	20ESX01.2	L2
7 (a)	Draw the projections of a regular pentagon of 30 mm side, having one of its sides in the HP and its surface making an angle of 45° with the HP	6M	20ESX01.3	L2
7 (b)	Draw the projections of a circular lamina of 50 mm diameter having one of its sides in the VP and inclined at 30° to the VP	6M	20ESX01.3	L3
	OR			
8 (a)	Draw the projections of a 60° set square of 30 mm side and longer edge 120 mm one of its sides in the HP and its surface making an angle of 45° with the HP	6M	20ESX01.3	L2

G. Kalyani

Controller of Examinations
NSRIT (A)
Visakhapatnam

8 (b)	Draw the projections of a regular hexagon of 30 mm side, having one of its sides in the HP and inclined at 60° to the V.P and its surface making an angle of 45° with the H.P	6M	20ESX01.3	L3
9 (a)	A square prism, side of base 30 mm and axis 50 mm long , has its axis inclined at 60° to HP its has an edge of its base in the HP and inclined at 45° to VP. Draw the projections	6M	20ESX01.4	L2
9 (b)	Draw the projection of a cone, base 75 mm diameter and axis 100 mm long, lying on HP. on one of its generators with axis parallel to the V.P	6M	20ESX01.4	L3
	OR			
10 (a)	A square prism, side of base 30 mm and axis 50 mm long , has its axis inclined at 60° to HP its has an edge of its base in the H.P and inclined at 45° to VP. Draw the projections	6M	20ESX01.4	L2
10 (b)	Draw the projections of a cone, base 65 mm diameter and axis 120 mm long, lying on the ground on one of its generators with the axis parallel to the VP	6M	20ESX01.4	L3
11	Draw top, front and side views of the isometric projection given in the figure 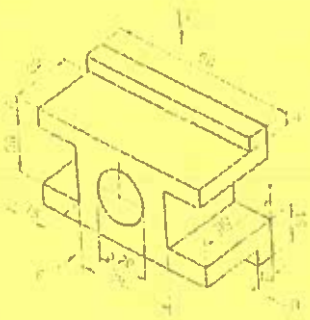	12M	20ESX01.5	L4
	OR			
12	Draw an isometric view of a square prism having a base with a 40 mm side and a 60 mm long axis, resting on the HP. a) on its base with axis perpendicular to the HP, b) on its rectangular faces with axis perpendicular to the VP and c) on its rectangular face with axis parallel to the VP	12M	20ESX01.5	L4

G-Kalyani
Controller of Examinat
NSRIT (A)
Visakhapatnam

Nadimpalli Satyanarayana Raju Institute of Technology (NSRIT)
Sontyam, Vizag, Andhra Pradesh

Preamble: This feedback form AC 23 is intended to receive feedback on the quality of questions to ensure that the intended learning outcomes in terms Knowledge, Understanding and Skill are assessed. Also this form helps us to improve the quality of the questions that appear in the assessment instrument.

The Vision of the Institute

To promote societal empowerment and become an institution of excellence in the field of engineering education and research.

The Mission of the Institute

- To develop the students into outstanding professionals through innovative Teaching-Learning process.
- To uphold research through long term Academia-Industry interaction.
- To inculcate ethical standards and moral values.

Dept.: Dept.: Civil Engg. | CSE | CSE (AI & ML) | CSE (DS) | ECE | EEE | ME | BS &H

Name of the Reviewer : B.T.Krishna Designation : Professor
Organization :JNTUK
Academic Year :2021
Semester :II
Curse Title :Digital Logic Design

1. Are the questions being relevant to the assessment of Course Outcomes as well as to understand the mastery of the learners on that course of study?

   Yes | No. If yes, please rate it on a five-point scale 5

2. Are the questions being very clear in easily understandable language without any sort of ambiguity?

   Yes | No. If yes, please rate it on a five-point scale 5

3. Are the questions being crisp and concise and omits irrelevant information that reduces the students' question response time?

   Yes | No. If yes, please rate it on a five-point scale 5

4. Do you observe any of the questions that has less scope to assess the intended knowledge and skill?

   Yes | No. If yes, please rate it on a five-point scale 4

5. Are the questions being addressing appropriate cognitive levels of Revised Bloom's Taxonomy (RBT) that facilitates critical thinking and problem-solving skills?

   Yes | No. If yes, please rate it on a five-point scale 5

6. Are the questions being single dimensional avoiding multiple ideas to evaluate one response at a time?

   Yes | No. If yes, please rate it on a five-point scale 5

7. In general, how do you rate the quality and standard of questions? Good

8. General Remarks nil

B.T. Krishna
Signature

HEAD OF THE DEPARTMENT
DEPARTMENT OF ECE
UCEK JNTUK KAKINADA

NSRIT

Semester End Examination, Sept./Oct., 2021

Degree	B. Tech. (U. G.)	Program	CSE,CSM & CSD			Academic Year	2020 - 2021
Course Code	20EC203	Test Duration	3 Hrs.	Max. Marks	70	Semester	II
Course	Digital logic Design						

Part A Short Answer Questions 5 x 2 = 10 Marks)

No.	Questions (1 through 5)	Learning Outcome (s)	DoK
1	Convert $(0.625)_{10}$ decimal number to binary number $(?)_2$ using successive multiplication method	20EC203.1	L3
2	State the absorption law of Boolean algebra	20EC203.2	L1
3	Give the general procedure for converting a Boolean expression in to multilevel NAND diagram?	20EC203.3	L1
4	What are the three types of fundamental PLDS?	20EC203.4	L1
5	What is race around condition?	20EC203.5	L1

Part B (Long Answer Questions 5 x 12 = 60 Marks)

No.	Questions (6 through 15)	Marks	Learning Outcome (s)	DoK
6 (a)	Convert the given binary 1010110 to gray code	6M	20EC203.1	L2
6 (b)	Convert the following: (i) 57_{10} to binary (ii) 743_8 to binary (iii) $A9B_{16}$ to binary	6M	20EC203.1	L2
	OR			
7 (a)	Convert $(567.1875)_{10}$ into hexadecimal	4M	20EC203.1	L2
7 (b)	Design an 8421 to gray code converter	8M	20EC203.1	L2
8 (a)	Develop the given function $Y(M, N, O, P) = \Sigma_m(0, 2, 4, 6, 9, 13)$ Draw the K-map and Implement the simplified expression using basic gates	6M	20EC203.2	L2
8 (b)	Analyze the basic rules (laws) that are used in Boolean expressions with few examples	6M	20EC203.2	L2
	OR			
9 (a)	Simplify the following Boolean expression in i) SOP using Karnaugh map AC'+B'D+A'CD+ABCD	6M	20EC203.2	L2
9 (b)	Simplify the following Boolean expression in ii) POS using Karnaugh map AC'+B'D+A'CD+ABCD	6M	20EC203.2	L2
10 (a)	Explain how a full adder can be built using two half adders	6M	20EC203.3	L6
10 (b)	Design a 4-bit carry full adder circuit	6M	20EC203.3	L6
	OR			
11 (a)	Using 8 to 1 multiplexer, realize the Boolean function $T = f(w, x, y, z) = \Sigma(0,1,2,4,5,7,8,9,12,13)$	8M	20EC203.3	L6
11 (b)	Distinguish between a combinational logic circuit and a sequential logic circuit	4M	20EC203.3	L6
12 (a)	Show and implement the following function using a PROM $F(w,x,y,z)= \Sigma m(1,8,9,15)$ $G(w,x,y,z)= \Sigma m(0,1,2,3,4,5,7,8,10,11,12,13,14,15)$	6M	20EC203.4	L2
12 (b)	Explain the functions of JK flip flop	6M	20EC203.4	L2

G. Kalyani

Controller of Examinations
NSRIT (W)
Visakhapatnam

	OR			
13 (a)	Implement the following Boolean function using 3×4×2 PLA, $F1(x, y, z) = \Sigma (0, 1, 3, 5)$ and $F2(x, y, z) = \Sigma (3, 5, 7)$.	6M	20EC203.4	L3
13 (b)	Realize a JK flip flop using SR flip flop	6M	20EC203.4	L3
14 (a)	Explain in detail SR latch using NAND	6M	20EC203.5	L2
14 (b)	Explain in detail SR latch using NOR	6M	20EC203.5	L3
	OR			
15 (a)	Convert the SR Flip Flop to T Flip Flop	6M	20EC203.5	L3
15 (b)	Convert the JK Flip Flop to D Flip Flop	6M	20EC203.5	L3

G.Kalyani
Controller of Examinations
NSRIT (A)
Visakhapatnam

Nadimpalli Satyanarayana Raju Institute of Technology (NSRIT)
Sontyam, Vizag, Andhra Pradesh

Preamble: This feedback form AC 23 is intended to receive feedback on the quality of questions to ensure that the intended learning outcomes in terms Knowledge, Understanding and Skill are assessed. Also this form helps us to improve the quality of the questions that appear in the assessment instrument.

The Vision of the Institute
To promote societal empowerment and become an institution of excellence in the field of engineering education and research.

The Mission of the Institute
- To develop the students into outstanding professionals through innovative Teaching-Learning process.
- To uphold research through long term Academia-Industry interaction.
- To inculcate ethical standards and moral values.

Dept.: Dept.: Civil Engg. | CSE | CSE (AI & ML) | CSE (DS) | ECE | EEE | ME | BS &H

Name of the Reviewer :DR T Vinay Kumar Designation: Assistant Professor
Organization : NIT Warangal
Academic Year :2020-21
Semester : II
Curse Title : Network Analysis and Synthesis

1. Are the questions being relevant to the assessment of Course Outcomes as well as to understand the mastery of the learners on that course of study?

   Yes | No. If yes, please rate it on a five-point scale _____5_____ (5: High to 1: Low)

2. Are the questions being very clear in easily understandable language without any sort of ambiguity?

   Yes | No. If yes, please rate it on a five-point scale _____4.5_____ (5: High to 1: Low)

3. Are the questions being crisp and concise and omits irrelevant information that reduces the students' question response time?

   Yes | No. If yes, please rate it on a five-point scale _____4_____ (5: High to 1: Low)

4. Do you observe any of the questions that has less scope to assess the intended knowledge and skill?

   Yes | No. If yes, please rate it on a five-point scale _____4.5_____ (5: High to 1: Low)

5. Are the questions being addressing appropriate cognitive levels of Revised Bloom's Taxonomy (RBT) that facilitates critical thinking and problem-solving skills?

   Yes | No. If yes, please rate it on a five-point scale _____4.5_____ (5: High to 1: Low)

6. Are the questions being single dimensional avoiding multiple ideas to evaluate one response at a time?

   Yes | No. If yes, please rate it on a five-point scale _____4.5_____ (5: High to 1: Low)

7. In general, how do you rate the quality and standard of questions?

~~Commendable~~ Excellent ~~Good~~ ~~Satisfactory~~

8. General Remarks

Signature

NSRIT

Supplementary Examination, Dec., 2021/Jan., 2022

Degree	B. Tech. (U. G.)	**Program**	CSE/CSM/CSD			**Academic Year**	2021 - 2022
Course Code	20CS201	**Test Duration**	3 Hrs.	Max. Marks	70	**Semester**	II
Course	**Data Structures using 'C'**						

Part A (Short Answer Questions 5 x 2 = 10 Marks)

No.	Questions (1 through 5)	Learning Outcome (s)	DoK
1	Define Abstract Data Type (ADT)	20CS201.1	L1
2	Define Single Linked List and Double Linked List	20CS201.2	L1
3	List any two applications of Queue	20CS201.3	L1
4	State the properties of Binary Trees	20CS201.4	L1
5	What is Spanning Tree?	20CS201.5	L1

Part B (Long Answer Questions 5 x 12 = 60 Marks)

No.	Questions (6 through 15)	Marks	Learning Outcome (s)	DoK
6 (a)	Explain the classifications of Data Structure with example	6	20CS201.1	L2
6 (b)	Explain the Time Complexity and Space Complexity	6	20CS201.1	L2
	OR			
7 (a)	Explain algorithm for Linear Search with an example	4	20CS201.1	L2
7 (b)	Write the selection sort algorithm and apply it to sort the following elements 50, 12, 84, 58, 26, 8, 11	8	20CS201.1	L3
8 (a)	Explain the representation of Linked List in Memory	4	20CS201.2	L2
8 (b)	Explain with an algorithm to insert and delete elements using Single Linked List	8	20CS201.2	L2
	OR			
9 (a)	Explain the applications of list with examples	6	20CS201.2	L2
9 (b)	Explain Sparse Matrix Representation using Linked List	6	20CS201.2	L2
10 (a)	Explain the Array representation with Linked List representation	6	20CS201.3	L2
10 (b)	Explain the applications of Stack	6	20CS201.3	L2
	OR			
11 (a)	Write an algorithm to perform Circular Queue and Dequeue	6	20CS201.3	L2
11 (b)	With a necessary algorithm, explain the implementation of Queue using arrays	6	20CS201.3	L2
12 (a)	Explain the types of Tree Traversal with example	6	20CS201.4	L2
12 (b)	Explain the Binary Tree and Binary Search Tree	6	20CS201.4	L2
	OR			
13	Construct a binary search tree by inserting 30, 10, 4, 19, 62, 35, 28, 73 into an initially empty tree. Show the results of splaying the nodes 4 and 62 one after the other of the constructed tree	12	20CS201.4	L3
14 (a)	Compare Breadth First Search with Depth First Search	6	20CS201.5	L2
14 (b)	Explain Depth First Search with examples	6	20CS201.5	L2
	OR			
15	Explain Prim's and Kruskal's algorithm. Find the minimum spanning tree with the sample graph using anyone of the algorithms	12	20CS201.5	L2

G. Kalyani
Controller of Examinations
NSRIT (A)
Visakhapatnam